Type A

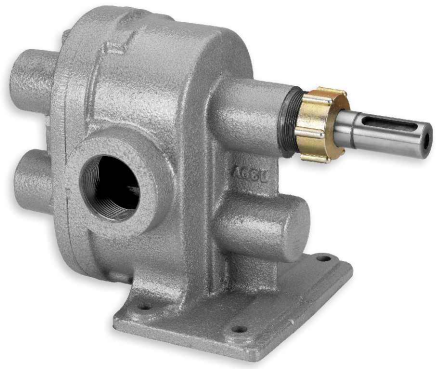

DESCRIPTION

Type A gear pumps are compact assemblies consisting of a cast body that houses a set of rotary gears, and two connecting ports. When the drive shaft is operated, the pump sucks in through one port and discharges the liquid out through the other, with the resulting pressure and flow rates being directly proportional to the power and speed applied, respectively.

APPLICATIONS

Suitable for multiple applications, especially where low speeds are required, for example:

- Lifting and transfer of various medium and high viscosity liquids (paints and varnishes, syrups, soaps and cosmetics, asphalts, diluted glycerines, dyes and disinfectants, alcohol inks...).
- Fumigation services in agricultural tasks.
- Coolant circulation in marine and stationary motors.
- Greasing and cooling services in machine tools.
- Various industrial applications.

CHARACTERISTICS

Speed in this type of pump should be between 100 and 750 rpm, thus ensuring a long working life with minimum care in this application range. Remember that the output flow in gear pumps is directly proportional to the number of revolutions.

The Type A model can work in both directions, although use in gland nut tightening direction is recommended. This type of pump is manufactured as standard with a right-hand thread, and in many cases also with a left-hand thread for use with a universal joint drive. If the pump must work in both directions, it can be manufactured with a locknut or a setscrew on request.

The noise level for Type A pumps ranges from 72 dB to 80 dB in larger models. These Type A pump models allow the transfer of liquids with a maximum viscosity between 1° and 250° E(1-1900 cSt).

The maximum temperature of the liquid to be transferred is 225°C, although a higher temperature range is possible with suitbale packing.

The maximum working pressure in operation with a liquid of viscosity 1° E (H^2O) is 8 kp/cm², while with liquids of viscosity 25° E, like many oils, it is 14 Kp/cm². See the Type F pump range if a higher speed range and/or operating pressure range is required.

SUPPLY

Type A gear pumps are manufactured in a range covering 13 different sizes, to attempt all flows rate requirements between 1 and 450 l / min. 8 of these 13 sizes are available in three different materials, in order to cover different types of liquids:

- **Iron**. Cast-iron body, carbon steel gears and hardened steel shafts, and used with lubricated, non-corrosive liquids.
- **Iron and stainless steel** . Cast iron body, AISI 431 stainless steel gears and AISI 420 tempered stainless steel shafts.
- **Bronze manufacturing** . Bronze body and gears and AISI 304 stainless steel shafts.
- **ATEX.** The standard versions of A-6, A-7, A-10 and A-14 have bronze bearings and an O-ring seal, as well as the option of using a mechanical seal, thus ensuring compatibility in an ATEX zone.

The A-10E, A-11E and A-12 models are manufactured with PTFE graphite bearings with thread for left-hand glands, making them particularly suitable for direct coupling to the tractor's output shaft with a universal joint. The A-5 model is also manufactured in this version as an option. Other models can also be supplied with a left-hand threaded plug; please enquire if required.

On request, these models can be manufactured in different versions with special, tempered and treated materials, thus allowing work with special liquids, corrosives, high temperatures, excessive pressures...

Type	GAS	Flow Q per lap [cm³]	Flow Q at 500 rpm [l/min]	Maximum revolutions [rpm]	Suction [atm] (1)	Pump weight [kg]
A-00	1/4"	7,6	3,6	800	0,4	1
A-0	1/4"	14	7	800	0,4	1,5
A-1	3/8"	20	10	800	0,4	3
A-2	1/2"	32	16	800	0,4	5,5
A-3	3/4"	60	30	800	0,6	14
A-4	1"	88	45	800	0,6	6,5
A-5	1 1/4"	136	68	800	0,6	9
A-10E	1" - 1 1/4"	192	96	550	0,6	12,5
A-11E	1" - 1 1/4"	260	130	550	0,6	14,5
A-6 / A-12	1 1/2"	300	150	550	0,8	20
A-7	2 1/2"	336	168	550	0,8	22,5
A-10	3"	740	370	550	0,8	50
A-14	4"	1260	500 (400 rpm)	400	0,8	96

(1) 1 atm = 10,33 mca.The suction capacity in Type A gear pumps is determined by a number of factors; viscosity of the liquid to be transferred, working revolutions, pump size and installation conditions. These data have been obtained with SAE 30 oil at the maximum speed indicated in the table, and with a pipe corresponding to the suction nozzle. If these conditions vary, the result may change. Consult where appropriate.

Type A

Technical data

Flow

Flow without pressure [l/min]

Type	250 rpm	350 rpm	500 rpm	750 rpm
A-00	1,8	2,5	3,6	5,4
A-0	3,5	5	7	10,5
A-1	5	7	10	15
A-2	8	11	16	24
A-3	15	21	30	45
A-4	22	32	44	66
A-5	34	49	68	102
A-10E	48	67	96	-
A-11E	65	90	130	-
A-6 A-12	75	105	150	-
A-7	84	117	168	-
A-10	185	260	370	-
A-14	315	435	-	-

Power

Required power at 500 rpm [Cv]

Type	0,1 bar	4 bar	5 bar
A-00	0,10	0,15	0,20
A-0	0,12	0,20	0,30
A-1	0,15	0,25	0,40
A-2	0,20	0,40	0,75
A-3	0,25	0,60	0,80
A-4	0,30	0,90	1,50
A-5	0,60	1,50	3,00
A-10E	1,00	2,00	3,00
A-11E	1,25	3,00	4,00
A-6 A-12	1,25	3,00	4,00
A-7	1,50	4,00	5,50
A-10	4,00	10,0	15,0
A-14 *	7,50	20,0	30,0

* 400 maximum rpm.

Viscosity

Viscosity [cSt] *	Type								
	0	1	2	3-4	5-10E	11E-12	6-7	10	14
150	800	800	800	800	500	500	500	500	400
350	800	800	800	635	500	400	400	300	300
750	650	600	500	400	350	350	250	200	200
1000	415	380	320	250	225	225	160	130	130
1500	325	300	250	200	175	175	125	100	100

* Multiplied by 0,132 to convert centistokes to grade Engler.

Note: The viscosity is directly related to the temperature in most fluids. To achieve greater versatility in performance, is wise to incorporated a variable frequency driver to adjusted the speed of motor or gear motor to fluids with different viscosities.

Type A

Characteristic curves

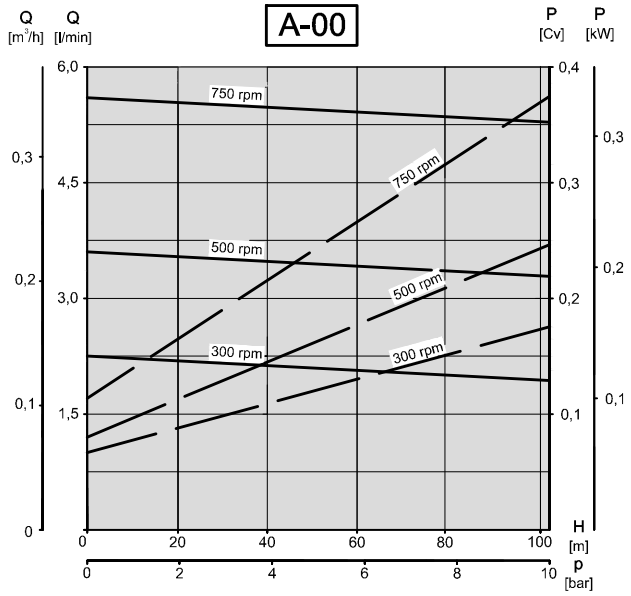

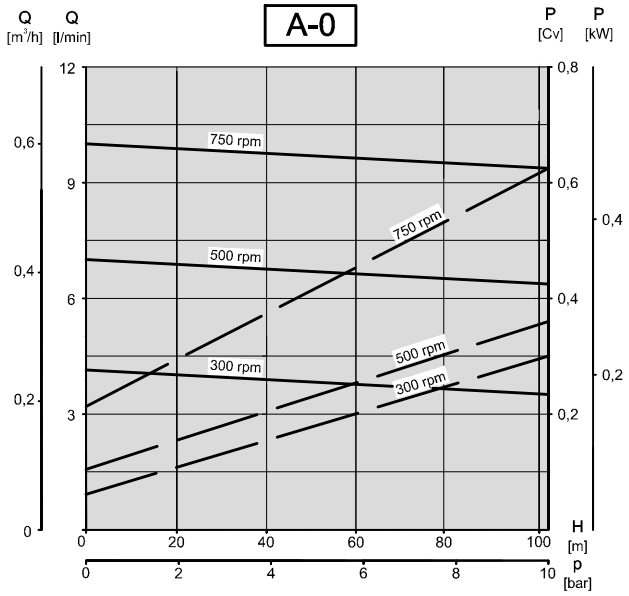

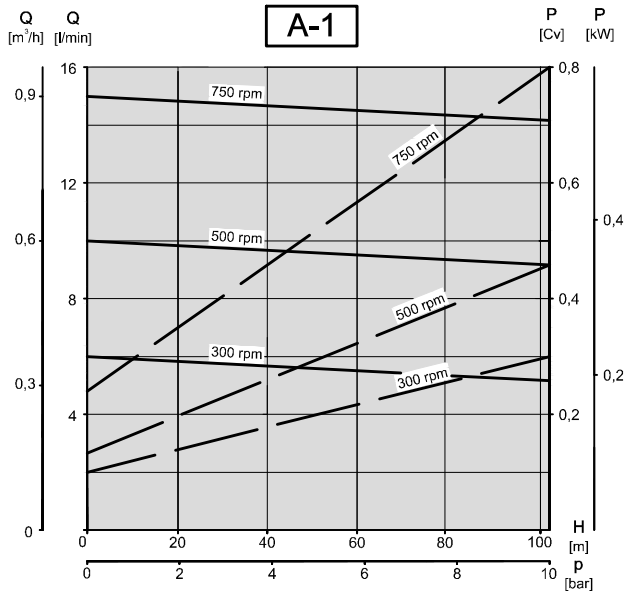

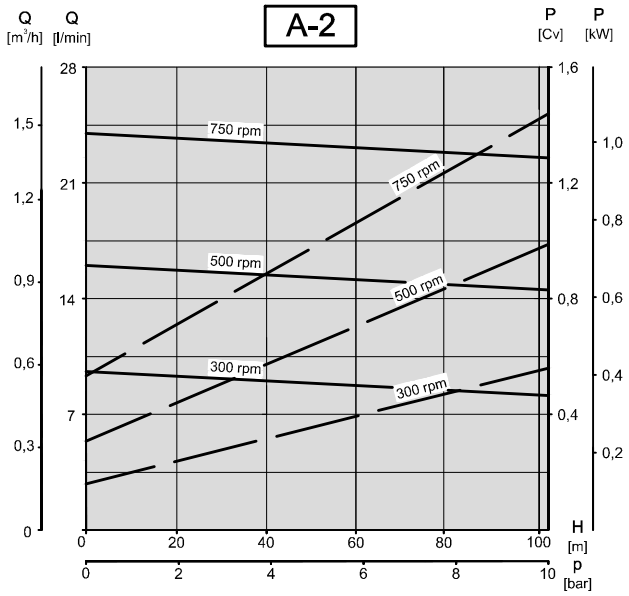

Flow - Pressure ————————
Power - Pressure — — — —

The curves refer to a oil (viscosity 25 °E).
Error margin for the flow (Q) and power (P) +2,5% ... -5%.

CMI, S.A.

Type A

Characteristic curves

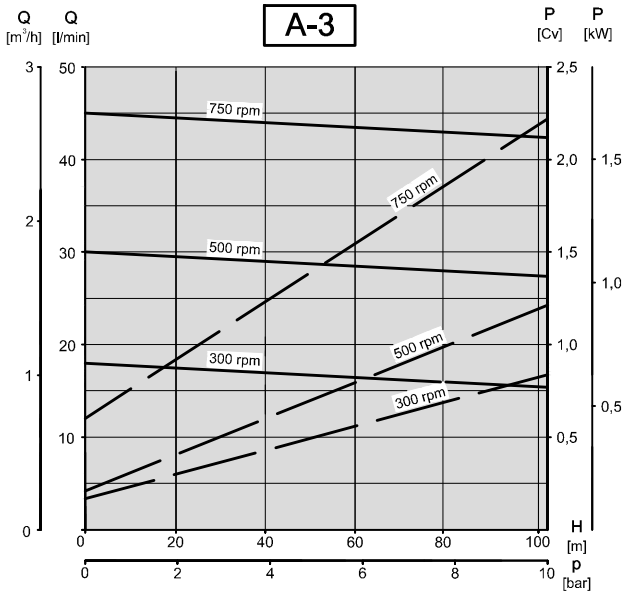

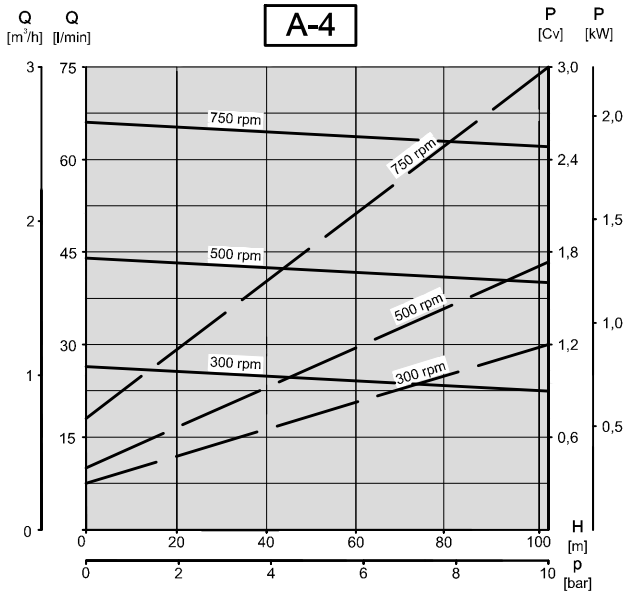

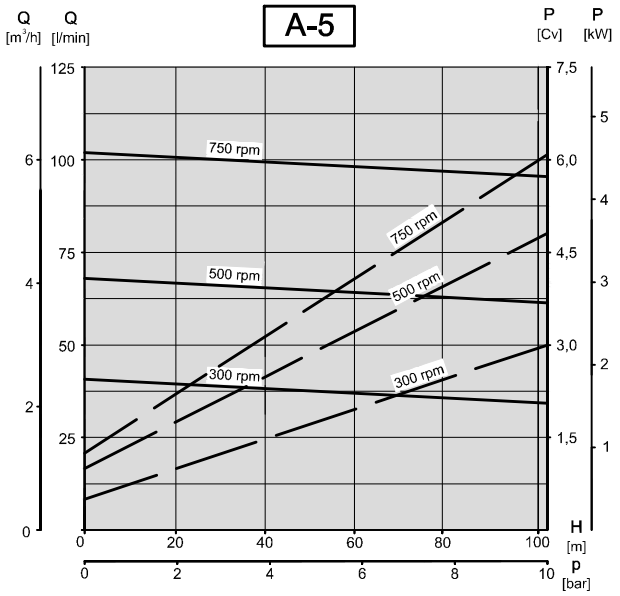

Flow - Pressure ————————
Power - Pressure — — — —

The curves refer to a oil (viscosity 25 °E).
Error margin for the flow (Q) and power (P) +2,5% ... -5%.

CMI, S.A.

Type A

Characteristic curves

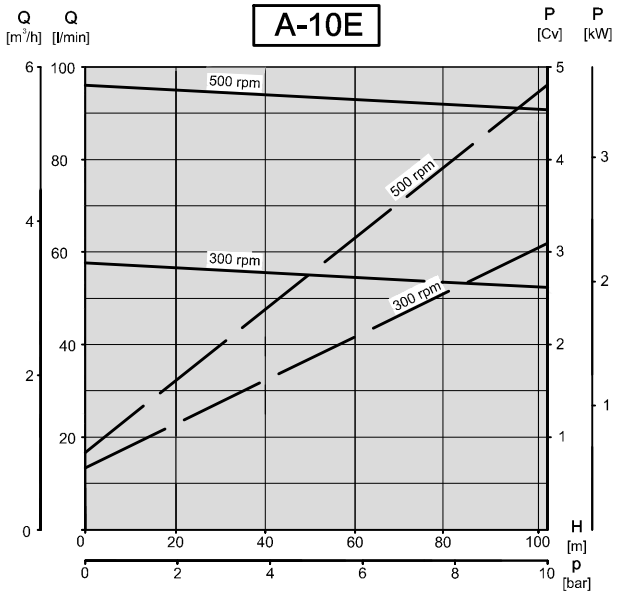

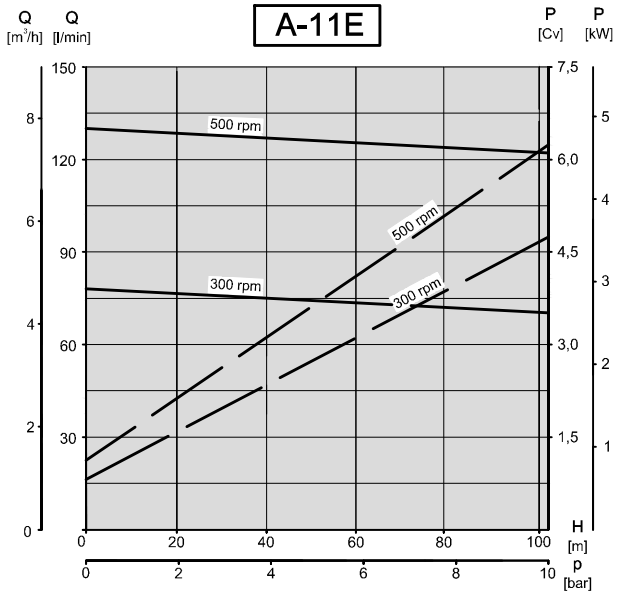

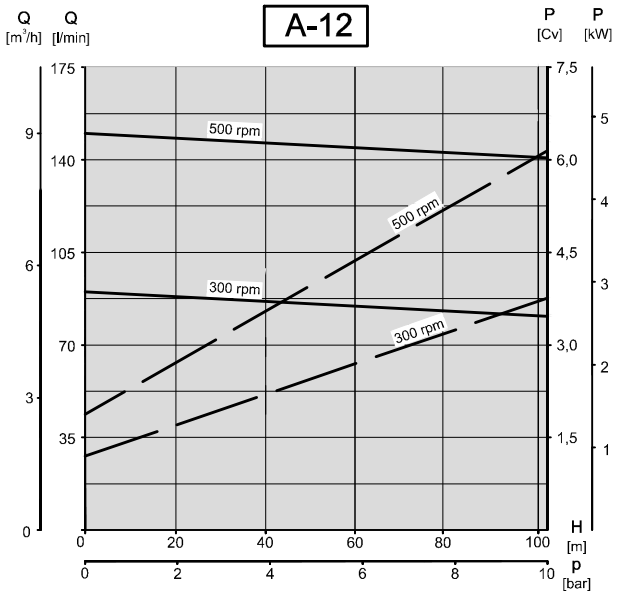

Flow - Pressure ————————
Power - Pressure — — — —

The curves refer to a oil (viscosity 25 °E).
Error margin for the flow (Q) and power (P) +2,5% ... -5%.

CMI, S.A.

Type A

Characteristic curves

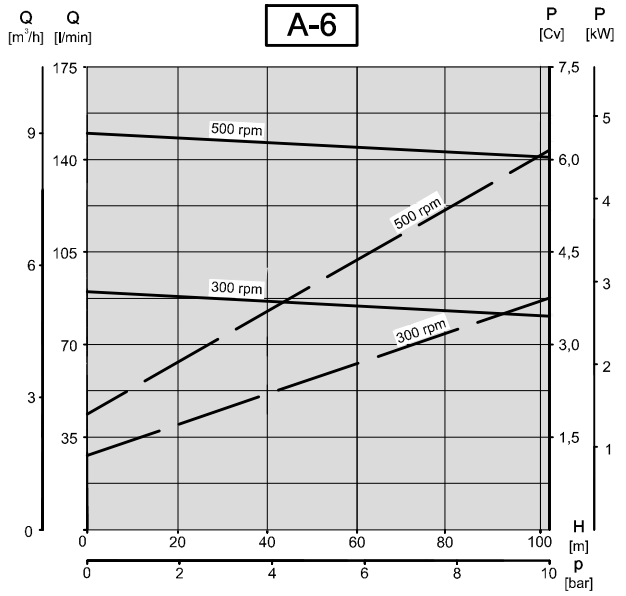

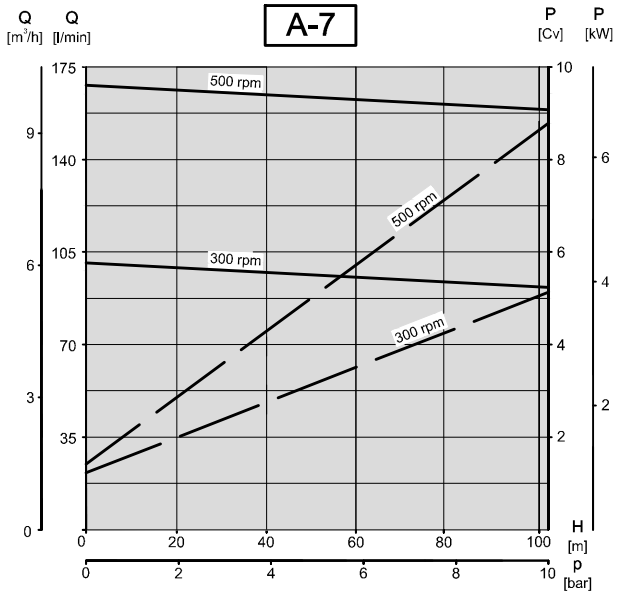

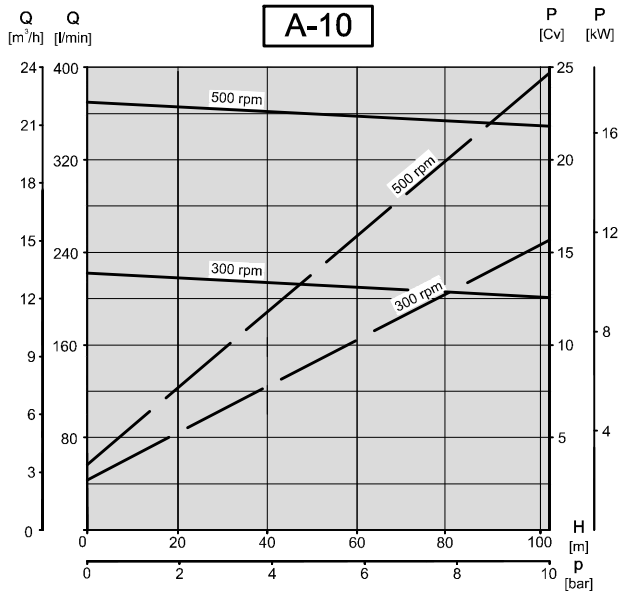

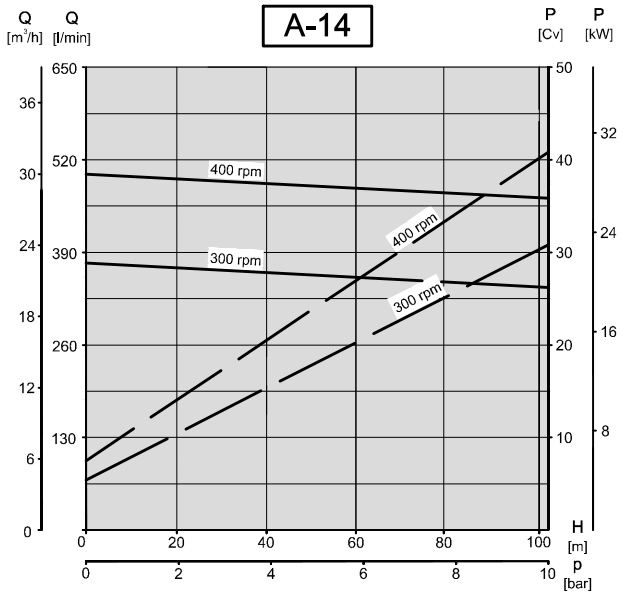

Flow - Pressure ————————
Power - Pressure — — — —

The curves refer to a oil (viscosity 25 °E).
Error margin for the flow (Q) and power (P) +2,5% ... -5%.

Type A

Measurements

From A-00 to A-11E

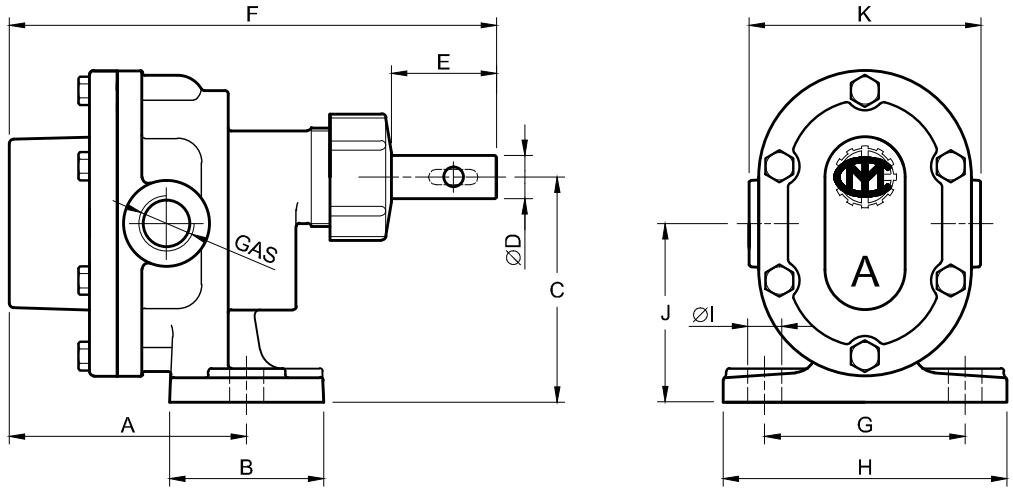

Dimensional data

Type	A	B	C	D	E	F	G	H	I	J	K	GAS	Pin	Ø Countersink
A-00	65	30	50	12	30	130	43	68	9	40	57	1/4"	-	6,5
A-0	62	40	61	13	34	146	52	80	11	47	62	1/4"	5x5x16	6,5
A-1	77	60	73	14	30	160	65	95	11	61	80	3/8"	5x5x20	6,5
A-2	83	60	86	16	30	175	72	100	11	66	95	1/2"	5x5x20	6,5
A-3	101	65	92	19	45	220	80	105	11	72	88	3/4"	6x6x25	8,5
A-4	127	65	92	19	50	240	80	105	11	72	105	1"	6x6x25	8,5
A-5	145	80	114	21	50	270	80	110	11	83	120	1 1/4"	6x6x25	10
A-10E	182	80	114	21	50	312	80	110	11	85	126	1"-1 1/4"	-	10
A-11E	169	80	128	25	55	312	80	140	11	95	140	1"-1 1/4"	-	12

From A-11E to A-14

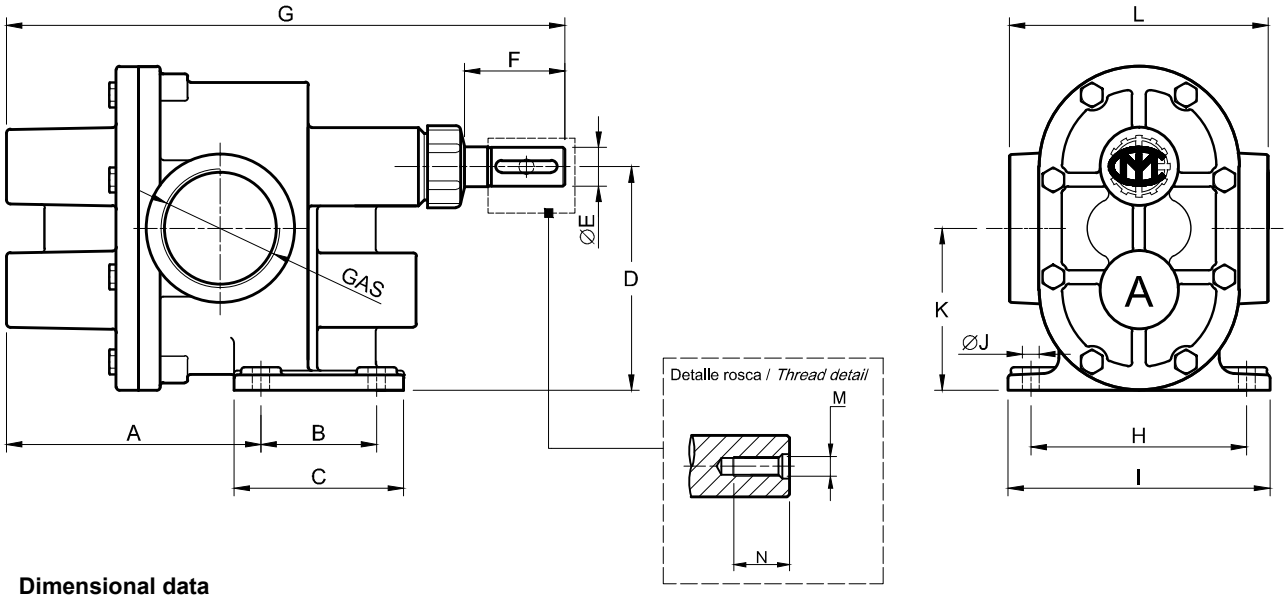

Dimensional data

Type	A	B	C	D	E	F*	G*	H	I	J	K	L	M	N	GAS	Pin	Ø Countersink
A-11E	145	38	80	128	25	55	312	118	140	11	95	140	-	-	1"-1 1/4"	-	12
A-6 A-12	145	75	120	145	25	65	325	140	170	11	105	165	M-8	23	1 1/2"	8x7x40	10
A-7	160	75	120	150	25	55	350	140	170	11	110	165	M-8	23	2 1/2"	8x7x40	-
A-10	180	120	180	192	30	65	440	180	220	13	145	220	M-10	28	3"	8x7x40	-
A-14	198	190	240	218	40	70	600	200	250	15	162	250	M-10	28	4"	12x8x50	-

Type A

Motor pumps measurements

From A-00 to A-5 motor pumps on bench

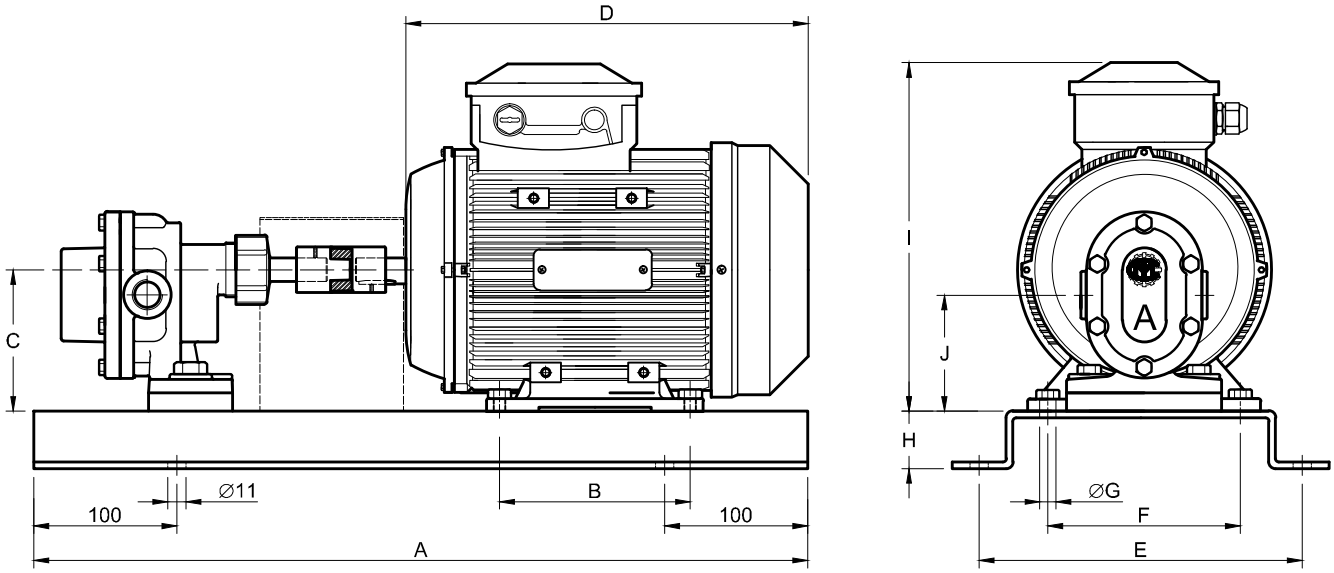

Dimensional data

Type	A	B	C	D	E	F	G	H	I	J	Standard power [kW]
A-00	550	100	80	250	192	125	10x13	34	213	70	0,25 / 750 rpm
A-0	550	100	80	250	192	125	10x13	34	213	66	0,37 / 750 rpm
A-1	550	100	90	262	192	140	10x13	34	229	78	0,37 / 750 rpm
A-2	600	140	100	309	222	160	12x15	39	252	80	0,75 / 750 rpm
A-3	600	140	100	309	222	160	12x15	39	252	80	1,10 / 750 rpm
A-4	750	140	112	335	252	190	12x15	47	279	92	1,50 / 750 rpm
A-5	750	140	132	357	252	216	12x15	47	318	101	2,20 / 750 rpm

Approximate measurements of standard motor ; depending on power or manufacturer the measures can change.

Type A

Pump coupled to gear motor

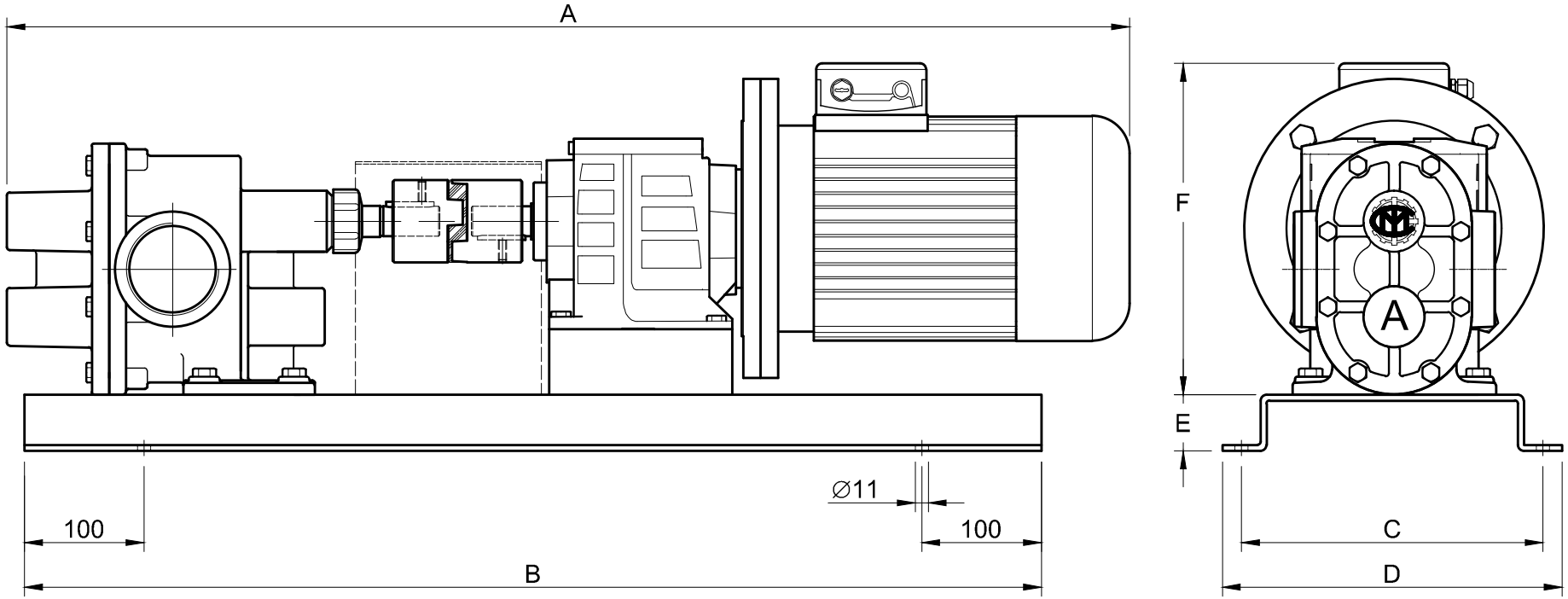

Dimensional data

Bench	A (1)	B	C	D	E	F (1)
Type 0	600	550	192	224	34	130
Type 1	750	600	222	254	39	225
Type 2	900	750	252	284	47	275
Type 3	1200	900	272	304	53	300
Type 4	1350	1000	312	344	54	350

(1) Approximate measurements of pump-gear motor standard asembly; depending on pump type, power, gear ratio or manufacturer the measures can change.

CMI, S.A.